MAYTONI
DECORATIVE LIGHTING

# Instruction

## MOD036PL-L91B

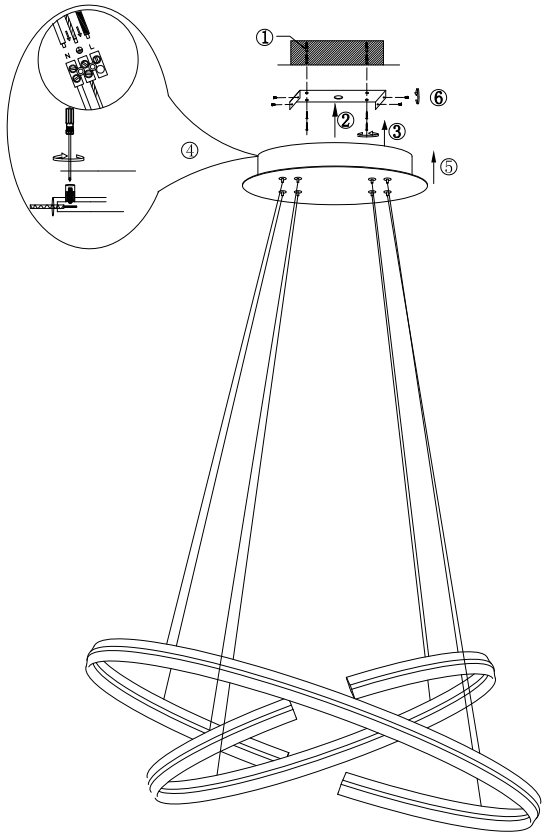


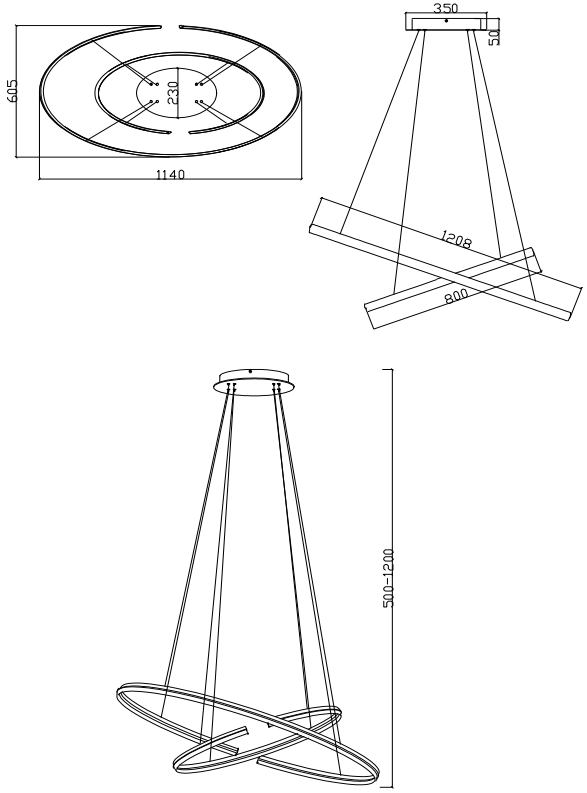


LED

MAX 91W
3700 Lumen

Model: MOD036PL-L91B
Collection: Technical
Series: Azumi

Ceilling Lamps