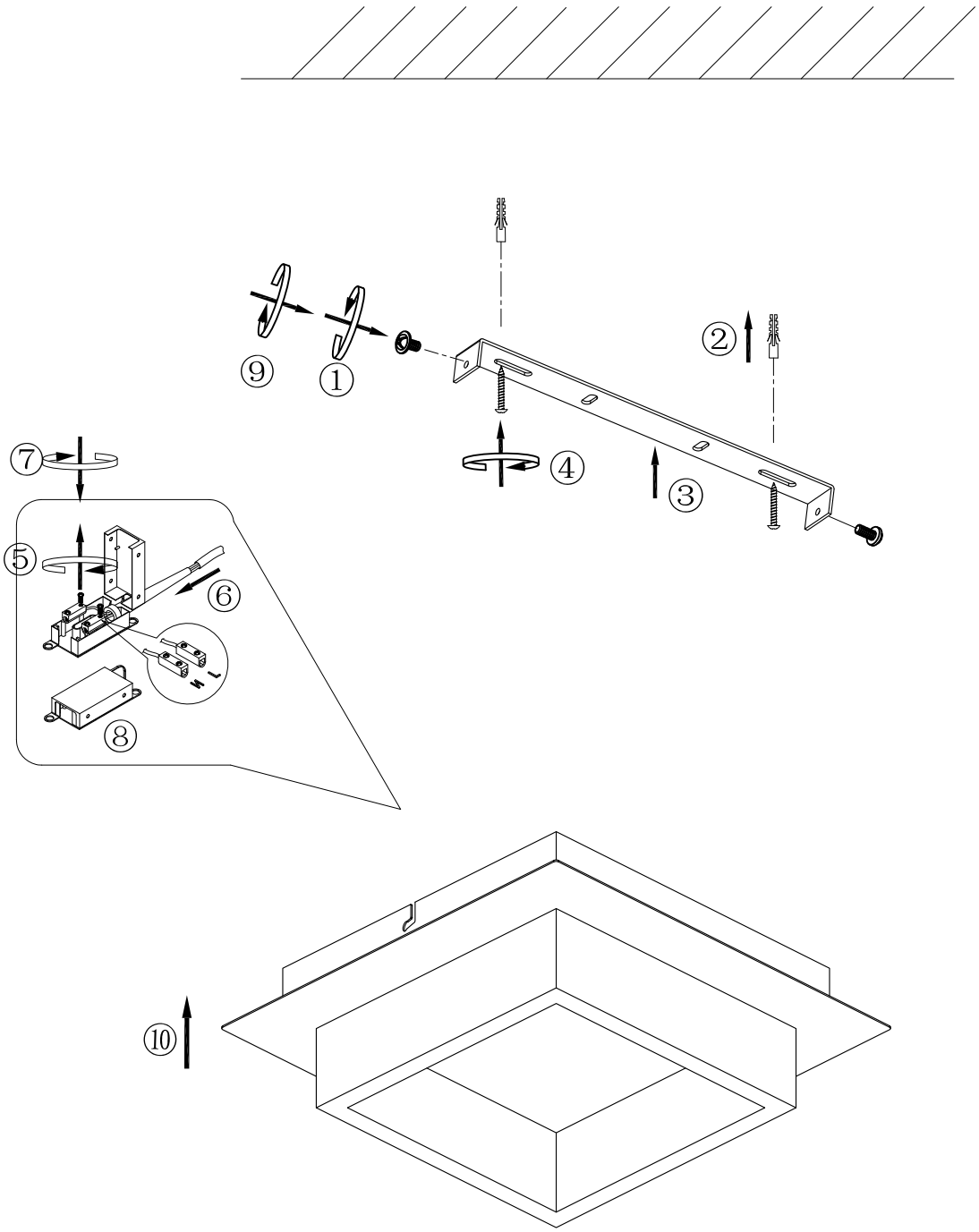Model No.: SL831.501.01